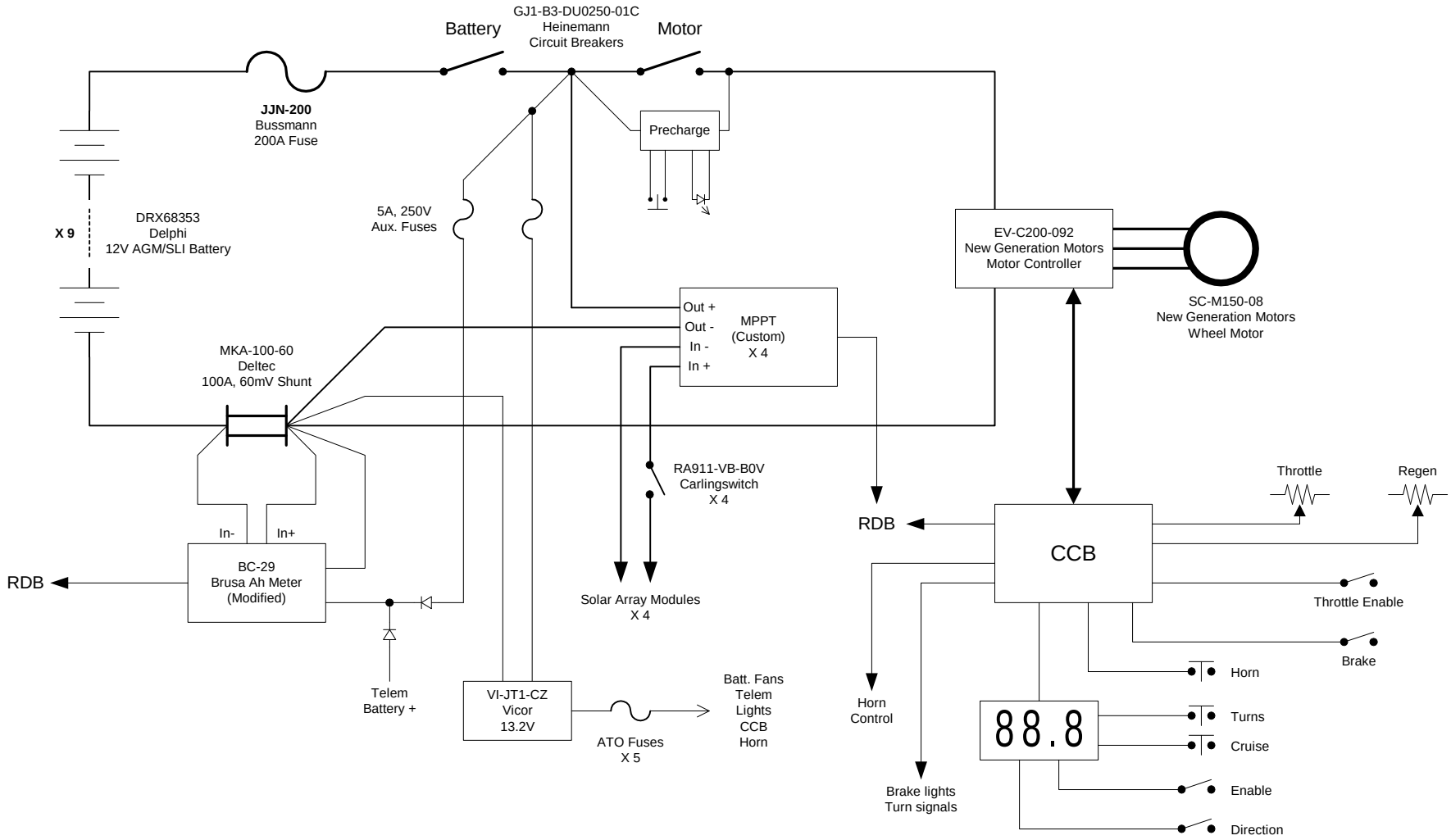
GJ1-B3-DU0250-01C
Heinemann
Circuit Breakers
Battery
Motor
JJN-200
Bussmann
200A Fuse
Precharge
X 9
DRX68353
Delphi
12V AGM/SLI Battery
5A, 250V
Aux. Fuses
EV-C200-092
New Generation Motors
Motor Controller
SC-M150-08
New Generation Motors
Wheel Motor
Out +
Out -
In -
In +
MPPT
(Custom)
X 4
MKA-100-60
Deltec
100A, 60mV Shunt
RA911-VB-B0V
Carlingswitch
X 4
Throttle
Regen
RDB
CCB
In-
In+
BC-29
Brusa Ah Meter
(Modified)
RDB
Solar Array Modules
X 4
Throttle Enable
Brake
Horn
Turns
Cruise
Enable
Direction
88.8
Horn
Control
Brake lights
Turn signals
Telem
Battery +
VI-JT1-CZ
Vicor
13.2V
ATO Fuses
X 5
Batt. Fans
Telem
Lights
CCB
Horn